System-on-Chip for 2.4-GHz RF Applications

FEATURES

- RF section
  - Single-Chip 2.4-GHz RF Transceiver and MCU
  - Supports 250 kbps, 500 kbps, 1 Mbps and 2 Mbps data rates
  - Excellent Link Budget, Enabling Long Range Without External Front-Ends
  - Programmable Output Power up to 4 dBm
  - Excellent Receiver Sensitivity (–90 dBm at 2 Mbps, –98 dBm at 250 kbps)
  - Suitable for Systems Targeting Compliance With Worldwide Radio Frequency Regulations: ETSI EN 300 328 and EN 300 440 Category 2 (Europe), FCC CFR47 Part 15 (US), and ARIB STD-T66 (Japan)
  - Accurate RSSI Function
- Layout
  - Few External Components
  - Pin Out Suitable for Single Layer PCB Applications
  - Reference Designs Available
  - 48-pin 7-mm × 7-mm QFN (31 General I/O Pins) Package
- Low Power
  - Active Mode RX Best Performance: 20.8 mA
  - Active Mode TX (0 dBm): 26.3 mA
  - Power Mode 1 (5 µs Wake-Up): 235 µA
  - Power mode 2 (sleep timer on): 0.9 µA
  - Power mode 3 (External interrupts): 0.4µA
  - Wide Supply Voltage Range (2V to 3.6V)
  - Full RAM and Register Retention in All Power Modes
- Microcontroller
  - High-Performance and Low-Power 8051 Microcontroller Core With Code Prefetch
  - 32-KB Flash Program Memory
  - 1 KB SRAM
  - Hardware Debug Support
  - Extensive Baseband Automation, Including Auto-Acknowledgement and Address Decoding
- Peripherals
  - Two-Channel DMA with Access to all Memory Areas and Peripherals
  - General-Purpose Timers (One 16-Bit, Two 8-Bit)
  - Radio Timer, 40-Bit
  - IR Generation Circuitry
  - Several Oscillators:
    - 32MHz XOSC
    - 16MHz RCOSC
    - 32kHz XOSC
    - 32kHz RCOSC
  - 32-kHz Sleep Timer With Capture
  - AES Security Coprocessor
  - UART/SPI/I^2C Serial Interface
  - 31 General-Purpose I/O pins (3 × 20-mA Drive Strength, Remaining pins have 4 mA Drive Strength)
  - Watchdog Timer
  - True Random-Number Generator
  - ADC and Analog Comparator

APPLICATIONS

- Proprietary 2.4-GHz Systems
- Human Interface Devices (keyboard, mouse)
- Consumer Electronics

Please be aware that an important notice concerning availability, standard warranty, and use in critical applications of Texas Instruments semiconductor products and disclaimers thereto appears at the end of this data sheet.

PRODUCTION DATA information is current as of publication date. Products conform to specifications per the terms of the Texas Instruments standard warranty. Production processing does not necessarily include testing of all parameters.

Copyright © 2012–2013, Texas Instruments Incorporated

This integrated circuit can be damaged by ESD. Texas Instruments recommends that all integrated circuits be handled with appropriate precautions. Failure to observe proper handling and installation procedures can cause damage.

ESD damage can range from subtle performance degradation to complete device failure. Precision integrated circuits may be more susceptible to damage because very small parametric changes could cause the device not to meet its published specifications.

DESCRIPTION

The CC2545 is an optimized system-on-chip (SoC) solution with data rates up to 2Mbps built with low bill-of-material cost. The CC2545 combines the excellent performance of a leading RF transceiver with a single-cycle 8051 compliant CPU, 32-KB in-system programmable flash memory, up to 1-KB RAM, 31 General-Purpose I/O pins and many other powerful features. The CC2545 has efficient power modes with RAM and register retention below 1 µA, making it highly suited for low-duty-cycle systems where ultralow power consumption is required. Short transition times between operating modes further ensure low energy consumption.

The CC2545 is compatible with the CC2541/CC2543/CC2544. It comes in a 7-mm × 7-mm QFN48 package, with SPI/UART/I2C interface. The CC2545 comes complete with reference designs from Texas Instruments.

The device targets wireless consumer and HID applications. The CC2545 is tailored for peripheral devices such as wireless keyboards.

For block diagram, see Figure 7

ABSOLUTE MAXIMUM RATINGS(1)

over operating free-air temperature range (unless otherwise noted)

PARAMETER	TEST CONDITIONS	MIN	MAX	UNIT
Supply voltage VDD	All supply pins must have the same voltage	–0.3	3.9	V
Voltage on any digital pin		–0.3	VDD+0.3 <= 3.9	V
Input RF level			10	dBm
Storage temperature range		–40	125	°C
ESD(2)	All pads, according to human-body model, JEDEC STD 22, method A114 (HBM)		2000	V
	According to charged-device model, JEDEC STD 22, method C101 (CDM)		750	V

(1) Stresses beyond those listed under *Absolute Maximum Ratings* may cause permanent damage to the device. These are stress ratings only, and functional operation of the device at these or any other conditions beyond those indicated under *Recommended Operating Conditions* is not implied. Exposure to absolute-maximum-rated conditions for extended periods may affect device reliability.
(2) CAUTION: ESD sensitive device. Precaution should be used when handing the device in order to prevent permanent damage.

RECOMMENDED OPERATING CONDITIONS

PARAMETER	TEST CONDITIONS	MIN	MAX	UNIT
Operating ambient temperature range, T_A		–40	85	°C
Operating supply voltage VDD	All supply pins must have same voltage	2.0	3.6	V

Copyright © 2012–2013, Texas Instruments Incorporated

ELECTRICAL CHARACTERISTICS

Measured on Texas Instruments CC2545EM reference design with T_A = 25°C and VDD = 3.0 V, unless otherwise noted.

PARAMETER	TEST CONDITIONS	MIN	TYP	MAX	UNIT
	2 Mbps, GFSK, 320-kHz deviation				
I_{core}– Core current consumption	RX mode, no peripherals active, low MCU activity		20.8		mA
	TX mode, 0-dBm output power, no peripherals active, low MCU activity		26.3		mA
	TX mode, 5-dBm output power, no peripherals active, low MCU activity		30.2		mA
	Active mode, 16-MHz RCOSC, Low MCU activity		3		mA
	Active mode, 32-MHz clock frequency, low MCU activity		6		mA
	Power mode 0, CPU clock halted, all peripherals on, no clock division, 32-MHz crystal selected		4.5		mA
	Power mode 0, CPU clock halted, all peripherals on, clock division at max (Limits max speed in peripherals except radio), 32-MHz crystal selected		3		mA
	Power mode 1. Digital regulator ON; 16-MHz RCOSC and 32-MHz crystal oscillator OFF; 32.753-kHz RCOSC, POR, BOD, and sleep timer active; RAM and register retention		235		µA
	Power mode 2. Digital regulator OFF, 16 MHz RCOSC and 32 MHz crystal oscillator OFF; 32.753 kHz RCOSC, POR and sleep timer active; RAM and register retention		0.9		µA
	Power mode 3. Digital regulator OFF, no clocks, POR active; RAM and register retention		0.4		µA
I_{peri}– Peripheral current consumption (Adds to core current I_{core} for each peripheral unit activated)	Timer 1 (16-bit). Timer running, 32-MHz XOSC used		90		µA
	Radio timer(40 bit). Timer running, 32-MHz XOSC used		90		µA
	Timer 3 (8-bit). Timer running, 32-MHz XOSC used		60		µA
	Timer 4 (8-bit). Timer running, 32-MHz XOSC used		70		µA
	Sleep timer. Including 32.753-kHz RCOSC		0.6		µA

GENERAL CHARACTERISTICS

Measured on Texas Instruments CC2545EM reference design with T_A = 25°C and VDD = 3.0 V, unless otherwise noted.

PARAMETER	TEST CONDITIONS	MIN	TYP	MAX	UNIT
WAKE-UP AND TIMING					
Power mode 1 → Active	Digital regulator on, 16-MHz RCOSC and 32-MHz crystal oscillator off. Start-up of 16-MHz RCOSC.		5		µs
Power mode 2 or 3 → Active	Digital regulator off, 16 MHz RCOSC and 32 MHz crystal oscillator off. Start-up of regulator and 16 MHz RCOSC.		130		µs
Active → TX or RX	Crystal ESR = 16 Ω. Initially running on 16-MHz RCOSC, with 32-MHz XOSC OFF.		500		µs
	With 32-MHz XOSC initially ON.		180		µs
RX/TX turnaround	RCOSC, with 32MHz XOSC OFF.		130		µs
RADIO PART					
RF frequency range	Programmable in 1-MHz steps	2379		2496	MHz
Data rates and modulation formats	2 Mbps, GFSK 320-kHz deviation 2-Mbps, GFSK 500 kHz deviation 1-Mbps, GFSK 250 kHz deviation 1-Mbps, GFSK 160 kHz deviation 500 kbps, MSK 250 kbps, MSK 250 kbps, GSK 160 kHz deviation				

Copyright © 2012–2013, Texas Instruments Incorporated

RF RECEIVE SECTION

Measured on Texas Instruments CC2545EM reference design with T_A = 25°C, VDD = 3 V, and f_C = 2440 MHz, unless otherwise noted.

PARAMETER	TEST CONDITIONS	MIN	TYP	MAX	UNIT
2 Mbps, GFSK, 320-kHz DEVIATION, 0.1% BER					
Receiver sensitivity			–86		dBm
Saturation			–8		dBm
Co-channel rejection	Wanted signal at –67 dBm		–13		dB
In-band blocking rejection	±2-MHz offset, wanted signal at –67 dBm		–1		dB
	±4-MHz offset, wanted signal at –67 dBm		34		
	>±6-MHz offset, wanted signal at –67 dBm		38		
Out-of-band blocking rejection	1-MHz resolution. Wanted signal at –67 dBm, f < 2 GHz Two exception frequencies with poorer performance		–32		dBm
	1-MHz resolution. Wanted signal at –67 dBm, 2 GHz > f < 3 GHz Two exception frequencies with poorer performance		–38		
	1-MHz resolution. Wanted signal at –67 dBm, f > 3GHz Two exception frequencies with poorer performance		–12		
Intermodulation	Wanted signal at –64 dBm, 1st interferer is CW, 2nd interferer is GFSK-modulated signal. Offsets of interferers are: 6 and 12 MHz 8 and 16 MHz 10 and 20 MHz		–43		dBm
Frequency error tolerance (1)	Including both initial tolerance and drift. Sensitivity better than –70 dBm. 250 byte payload.	–300		300	kHz
Symbol rate error tolerance (2)	Sensitivity better than -70 dBm. 250 byte payload.	–120		120	ppm
2 Mbps, GFSK, 500 kHz DEVIATION, 0.1% BER					
Receiver sensitivity			–90		dBm
Saturation			–3		dBm
Co-channel rejection	Wanted signal at –67 dBm		–10		dB
In-band blocking rejection	±2 MHz offset, wanted signal at –67 dBm		–3		dB
	±4 MHz offset, wanted signal at –67 dBm		36		dB
	>±6 MHz offset, wanted signal at –67 dBm		44		dB
Frequency error tolerance (1)	Including both initial tolerance and drift. Sensitivity better than –70 dBm. 250 byte payload.	–300		300	kHz
Symbol rate error tolerance (2)	Sensitivity better than -70 dBm. 250 byte payload.	–120		120	ppm
1 Mbps, GFSK, 250 kHz DEVIATION, 0.1% BER					
Receiver sensitivity			–94		dBm
Saturation			6		dBm
Co-channel rejection	Wanted signal at –67 dBm		–7		dB
In-band blocking rejection	±1 MHz offset, wanted signal –67 dBm		0		dB
	±2 MHz offset, wanted signal –67 dBm		30		
	±3 MHz offset, wanted signal –67 dBm		34		
	>±5 MHz offset, wanted signal –67 dBm		38		
Frequency error tolerance	Including both initial tolerance and drift. Sensitivity better than –70 dBm. 250 byte payload.	–250		250	kHz
Symbol rate error tolerance	Sensitivity better than –70 dBm. 250 byte payload.	-80		80	ppm

(1) Difference between center frequency of the received RF signal and local oscillator frequency
(2) Difference between incoming symbol rate and the internally generated symbol rate

Copyright © 2012–2013, Texas Instruments Incorporated

RF RECEIVE SECTION (continued)

Measured on Texas Instruments CC2545EM reference design with T_A = 25°C, VDD = 3 V, and f_C = 2440 MHz, unless otherwise noted.

PARAMETER	TEST CONDITIONS	MIN	TYP	MAX	UNIT
1 Mbps, GFSK, 160 kHz DEVIATION, 0.1% BER					
Receiver sensitivity			–91		dBm
Saturation			6		dBm
Co-channel rejection	Wanted signal at –67 dBm		–8		dB
In band blocking rejection	±1 MHz offset, wanted signal at –67 dBm		2		dB
	±2 MHz offset, wanted signal at –67 dBm		28		
	±3 MHz offset, wanted signal at –67 dBm		33		
	>±5 MHz offset, wanted signal at –67 dBm		36		
Frequency error tolerance	Including both initial tolerance and drift, Sensitivity better than –67 dBm	–250		250	kHz
Symbol rate error tolerance	Maximum packet length	–80		80	ppm
500 kbps, MSK, 0.1% BER					
Receiver sensitivity			–98		dBm
Saturation			6		dBm
Co-channel rejection	Wanted signal at –67 dBm		–5		dB
In band blocking rejection	±1 MHz offset, wanted signal at –67 dBm		21		dB
	±2 MHz offset, wanted signal at –67 dBm		32		
	>±2 MHz offset, wanted signal at –67 dBm		33		
Frequency error tolerance	Including both initial tolerance and drift, Sensitivity better than –67dBm	–150		150	kHz
Symbol rate error tolerance	Maximum packet length	–60		60	ppm
250 kbps, GFSK, 160 kHz DEVIATION , 0.1% BER					
Receiver sensitivity			–98		dBm
Saturation			6		dBm
Co-channel rejection	Wanted signal at –67 dBm		–2		dB
In-band blocking rejection	±1 MHz offset, wanted signal at –67 dBm		22		dB
	±2 MHz offset, wanted signal at –67 dBm		32		
	>±2 MHz offset, wanted signal at –67 dBm		32		
Frequency error tolerance	Including both initial tolerance and drift, Sensitivity better than –67 dBm	–150		150	kHz
Symbol rate error tolerance	Maximum packet length	–60		60	ppm
250 kbps, MSK, 0.1% BER					
Receiver sensitivity			–98		dBm
Saturation			6		dBm
Co-channel rejection	Wanted signal at –67 dBm		–5		dB
In-band blocking rejection	±1 MHz offset, wanted signal at –67 dBm		21		dB
	±2 MHz offset, wanted signal at –67 dBm		32		
	>2 MHz offset, wanted signal at –67 dBm		33		
Frequency error tolerance	Including both initial tolerance and drift, Sensitivity better than –67 dBm	–150		150	kHz
Symbol rate error tolerance	Maximum packet length	–60		60	ppm
ALL RATES/FORMATS					
Spurious emission in RX. Conducted measurement	f < 1 GHz		–67		dBm
Spurious emission in RX. Conducted measurement	f > 1 GHz		–60		dBm

Copyright © 2012–2013, Texas Instruments Incorporated

RF TRANSMIT SECTION

Measured on Texas Instruments CC2545EM reference design with T_A = 25°C, VDD = 3.0 V, and f_C = 2440 MHz, unless otherwise noted.

PARAMETER	TEST CONDITIONS	MIN	TYP	MAX	UNIT
Output power, maximum setting	Delivered to a single-ended 50-Ω load through a balun using maximum recommended output power setting.		5		dBm
Output power, minimum setting	Delivered to a single-ended 50-Ω load through a balun using minimum recommended output power setting.		–20		dBm
Programmable output power range	Delivered to a single-ended 50-Ω load through a balun.		25		dB
Spurious emission in TX. Conducted measurement	f < 1 GHz		–46		dBm
	f > 1 GHz		–44		dBm
	Suitable for Systems Targeting Compliance With Worldwide Radio Frequency Regulations: ETSI EN 300 328 and EN 300 440 Class 2 (Europe), FCC CFR47 Part 15 (US), and ARIB STD-T66 (Japan)				

Use a simple LC filter (1.6nH and 1.8pF in parallel to ground) to pass ETSI conducted requirements below 1GHz in restricted bands. For radiated measurements low antenna gain for these frequencies (depending on antenna design) can achieve the same attenuation of these low frequency components (see EM reference design).

32-MHz CRYSTAL OSCILLATOR

Measured on Texas Instruments CC2545EM reference design with T_A = 25°C, VDD = 3.0 V, unless otherwise noted.

PARAMETER	TEST CONDITIONS	MIN	TYP	MAX	UNIT
Crystal frequency			32		MHz
Crystal frequency accuracy requirement	250 kbps and 500 kbps data rates 1 Mbps data rate 2 Mbps data rate	–30 –40 –60		30 40 60	ppm
Equivalent series resistance		6		60	Ω
Crystal shunt capacitance		1		7	pF
Crystal load capacitance		10		16	pF
Start-up time			0.25		ms
Power-down guard time	The crystal oscillator must be in power down for a guard time before it is used again. This requirement is valid for all modes of operation. The need for power-down guard time can vary with crystal type and load.	3			ms

32.768-kHz CRYSTAL OSCILLATOR

Measured on Texas Instruments CC2545EM reference design with T_A = 25°C, VDD = 3.0 V, unless otherwise noted.

PARAMETER	TEST CONDITIONS	MIN	TYP	MAX	UNIT
Crystal frequency			32.768		kHz
Crystal frequency accuracy requirement (1)		-100		+100	ppm
Equivalent series resistance			40	130	Ω
Crystal shunt capacitance			0.9	2	pF
Crystal load capacitance			12	16	pF
Start-up time			0.4		s

(1) Crystal frequency accuracy requirement is highly dependent on application. Higher accuracy enables more accurate duty-cycling which in turn will reduce current consumption. The chip can handle much less accurate crystals.

Copyright © 2012–2013, Texas Instruments Incorporated

32-kHz RC OSCILLATOR

Measured on Texas Instruments CC2545EM reference design with T_A = 25°C, VDD = 3.0 V, unless otherwise noted.

PARAMETER	TEST CONDITIONS	MIN	TYP	MAX	UNIT
Calibrated frequency			32.753		kHz
Frequency accuracy after calibration			±0.2%		
Temperature coefficient			0.4		%/ºC
Supply-voltage coefficient			3		%/V
Calibration time			2		ms

16-MHz RC OSCILLATOR

Measured on Texas Instruments CC2545EM reference design with T_A = 25°C, VDD = 3.0 V, unless otherwise noted.

PARAMETER	TEST CONDITIONS	MIN	TYP	MAX	UNIT
Calibrated frequency			16		MHz
Uncalibrated frequency accuracy			±18%		
Frequency accuracy after calibration			±0.6%		
Start-up time			10		µs
Initial calibration time			50		µs

RSSI CHARACTERISTICS

Measured on Texas Instruments CC2545EM reference design with T_A = 25°C, VDD = 3 V, unless otherwise noted.

2Mbps, GFSK, 320-kHz Deviation, 0.1% BER and 2 Mbps, GFSK, 500-kHz Deviation, 0.1% BER			
RSSI range(1)	Reduced gain by AC algorithm	64	dB
	High gain by AGC algorithm	64	
RSSI offset(1)	Reduced gain by AGC algorithm	79	dBm
	High gain by AGC algorithm	99	
Absolute uncalibrated accuracy(1)		±3	dB
Step size (LSB value)		1	dB
All Other Rates/Formats			
RSSI range(1)		64	dB
RSSI offset(1)		99	dBm
Absolute uncalibrated accuracy		±3	dB
Step size (LSB value)		1	dB

(1) Assuming CC2545 EM reference design. Other RF designs give an offset from the reported value.

FREQUENCY SYNTHESIZER CHARACTERISTICS

Measured on Texas Instruments CC2545EM reference design with T_A = 25°C, VDD = 3.0 V, unless otherwise noted.

PARAMETER	TEST CONDITIONS	MIN	TYP	MAX	UNIT
Phase noise, unmodulated carrier	At ±1 MHz from carrier		–112		dBc/Hz
	At ±3 MHz from carrier		–119		
	At ±5 MHz from carrier		–122		

Copyright © 2012–2013, Texas Instruments Incorporated

ANALOG TEMPERATURE SENSOR

Measured on Texas Instruments CC2545EM reference design with T_A = 25°C, VDD = 3.0 V unless otherwise noted

PARAMETER	TEST CONDITIONS	MIN	TYP	MAX	UNIT
Output	Measured using integrated ADC, internal band-gap voltage reference, and maximum resolution		1480		12-bit
Temperature coefficient			4.5		/ 0.1ºC
Voltage coefficient			1		/ 0.1V
Initial accuracy without calibration			±10		ºC
Accuracy using 1-point calibration			±5		ºC
Current consumption when enabled			0.5		mA

COMPARATOR CHARACTERISTICS

T_A = 25°C, VDD = 3 V. All measurement results are obtained using the CC2545 reference designs, post-calibration.

PARAMETER	TEST CONDITIONS	MIN	TYP	MAX	UNIT
Common-mode maximum voltage			VDD		V
Common-mode minimum voltage			–0.3		
Input offset voltage			1		mV
Offset vs temperature			16		µV/°C
Offset vs operating voltage			4		mV/V
Supply current			230		nA
Hysteresis			0.15		mV

Copyright © 2012–2013, Texas Instruments Incorporated

ADC CHARACTERISTICS

T_A = 25°C and VDD = 3 V

PARAMETER		TEST CONDITIONS	MIN	TYP	MAX	UNIT
	Input voltage	VDD is voltage on AVDD5 pin	0		VDD	V
	External reference voltage	VDD is voltage on AVDD5 pin	0		VDD	V
	External reference voltage differential	VDD is voltage on AVDD5 pin	0		VDD	V
	Input resistance, signal	Simulated using 4-MHz clock speed		197		kΩ
	Full-scale signal (1)	Peak-to-peak, defines 0 dBFS		2.97		V
ENOB (1)	Effective number of bits	Single-ended input, 7-bit setting		5.7		bits
		Single-ended input, 9-bit setting		7.5		
		Single-ended input, 10-bit setting		9.3		
		Single-ended input, 12-bit setting		10.3		
		Differential input, 7-bit setting		6.5		
		Differential input, 9-bit setting		8.3		
		Differential input, 10-bit setting		10		
		Differential input, 12-bit setting		11.5		
		10-bit setting, clocked by RCOSC		9.7		
		12-bit setting, clocked by RCOSC		10.9		
	Useful power bandwidth	7-bit setting, both single and differential		0–20		kHz
THD	Total harmonic distortion	Single ended input, 12-bit setting, –6 dBFS (1)		–75.2		dB
		Differential input, 12-bit setting, –6 dBFS (1)		–86.6		
	Signal to nonharmonic ratio	Single-ended input, 12-bit setting (1)		70.2		dB
		Differential input, 12-bit setting (1)		79.3		
		Single-ended input, 12-bit setting, –6 dBFS (1)		78.8		
		Differential input, 12-bit setting, –6 dBFS (1)		88.9		
CMRR	Common-mode rejection ratio	Differential input, 12-bit setting, 1-kHz sine (0 dBFS), limited by ADC resolution		>84		dB
	Crosstalk	Single ended input, 12-bit setting, 1-kHz sine (0 dBFS), limited by ADC resolution		>84		dB
	Offset	Midscale		–3		mV
	Gain error			0.68%		
DNL	Differential nonlinearity	12-bit setting, mean (1)		0.05		LSB
		12-bit setting, maximum (1)		0.9		
INL	Integral nonlinearity	12-bit setting, mean (1)		4.6		LSB
		12-bit setting, maximum (1)		13.3		
		12-bit setting, mean, clocked by RCOSC		10		
		12-bit setting, max, clocked by RCOSC		29		
SINAD (–THD+N)	Signal-to-noise-and-distortion	Single ended input, 7-bit setting (1)		35.4		dB
		Single ended input, 9-bit setting (1)		46.8		
		Single ended input, 10-bit setting (1)		57.5		
		Single ended input, 12-bit setting (1)		66.6		
		Differential input, 7-bit setting (1)		40.7		
		Differential input, 9-bit setting (1)		51.6		
		Differential input, 10-bit setting (1)		61.8		
		Differential input, 12-bit setting (1)		70.8		
	Conversion time	7-bit setting		20		µs
		9-bit setting		36		
		10-bit setting		68		
		12-bit setting		132		

(1) Measured with 300-Hz sine-wave input and VDD as reference.

Copyright © 2012–2013, Texas Instruments Incorporated

ADC CHARACTERISTICS (continued)

T_A = 25°C and VDD = 3 V

PARAMETER	TEST CONDITIONS	MIN	TYP	MAX	UNIT
Power consumption			1.2		mA
Internal reference VDD coefficient			4		mV/V
Internal reference temperature coefficient			0.4		mV/10°C
Internal reference voltage			1.15		V

DC CHARACTERISTICS

Measured on Texas Instruments CC2545EM reference design with T_A = 25°C, VDD = 3.0 V, unless otherwise noted.(1)

PARAMETER	TEST CONDITIONS	MIN	TYP	MAX	UNIT
Logic-0 input voltage				0.5	V
Logic-1 input voltage		2.5			V
Logic-0 input current		–50		50	nA
Logic-1 input current		–50		50	nA
I/O pin pullup and pulldown resistors			20		kΩ
Logic-0 output voltage 4-mA pins	Output load 4 mA			0.5	V
Logic-1 output voltage 4-mA pins	Output load 4 mA	2.4			V
Logic-0 output voltage 20-mA pins	Output load 20 mA			0.5	V
Logic-1 output voltage, 20-mA pins	Output load 20 mA	2.4			V

(1) Note that only two of the three 20-mA pins can drive in the same direction at the same time, and toggle at the same time.

CONTROL INPUT AC CHARACTERISTICS

T_A = –40°C to 85°C, VDD = 2 V to 3.6 V.

PARAMETER	TEST CONDITIONS	MIN	TYP	MAX	UNIT
System clock, f_{SYSCLK} $t_{SYSCLK} = 1/ f_{SYSCLK}$	The undivided system clock is 32 MHz when crystal oscillator is used. The undivided system clock is 16 MHz when calibrated 16-MHz RC oscillator is used.	16		32	MHz
RESET_N low duration	See item 1, Figure 1. This is the shortest pulse that is recognized as a complete reset pin request. Note that shorter pulses may be recognized but do not lead to complete reset of all modules within the chip.	1			µs
Interrupt pulse duration	See item 2, Figure 1.This is the shortest pulse that is recognized as an interrupt request.	20			ns

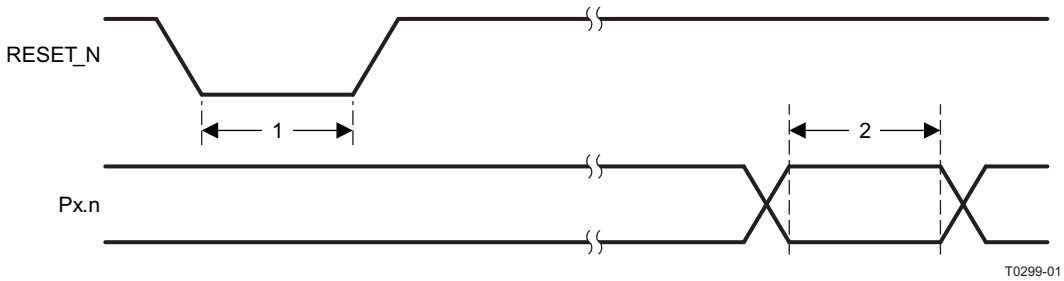

Figure 1. Control Input AC Characteristics

Copyright © 2012–2013, Texas Instruments Incorporated

SPI AC CHARACTERISTICS

T_A = –40°C to 85°C, VDD = 2 V to 3.6 V

PARAMETER		TEST CONDITIONS	MIN	TYP	MAX	UNIT
t_1	SCK period	Master, RX and TX	250			ns
		Slave, RX and TX	250			
	SCK duty cycle	Master		50%		
t_2	SSN low to SCK, Figure 2 and Figure 3	Master	63			ns
		Slave	63			
t_3	SCK to SSN high	Master	63			ns
		Slave	63			
t_4	MOSI early out	Master, load = 10 pF			7	ns
t_5	MOSI late out	Master, load = 10 pF			10	ns
t_6	MISO setup	Master	90			ns
t_7	MISO hold	Master	10			ns
	SCK duty cycle	Slave		50%		ns
t_{10}	MOSI setup	Slave	35			ns
t_{11}	MOSI hold	Slave	10			ns
t_8	MISO early out	Slave, load = 10 pF			0	ns
t_9	MISO late out	Slave, load = 10 pF			95	ns
	Operating frequency	Master, TX only			8	MHz
		Master, RX and TX			4	
		Slave, RX only			8	
		Slave, RX and TX			4	

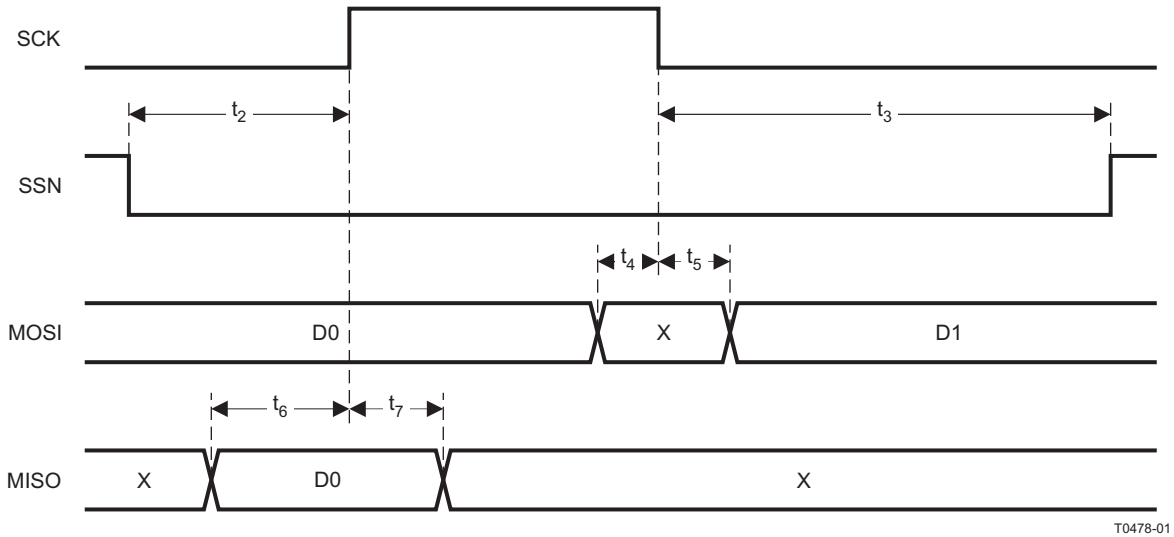

Figure 2. SPI Master AC Characteristics

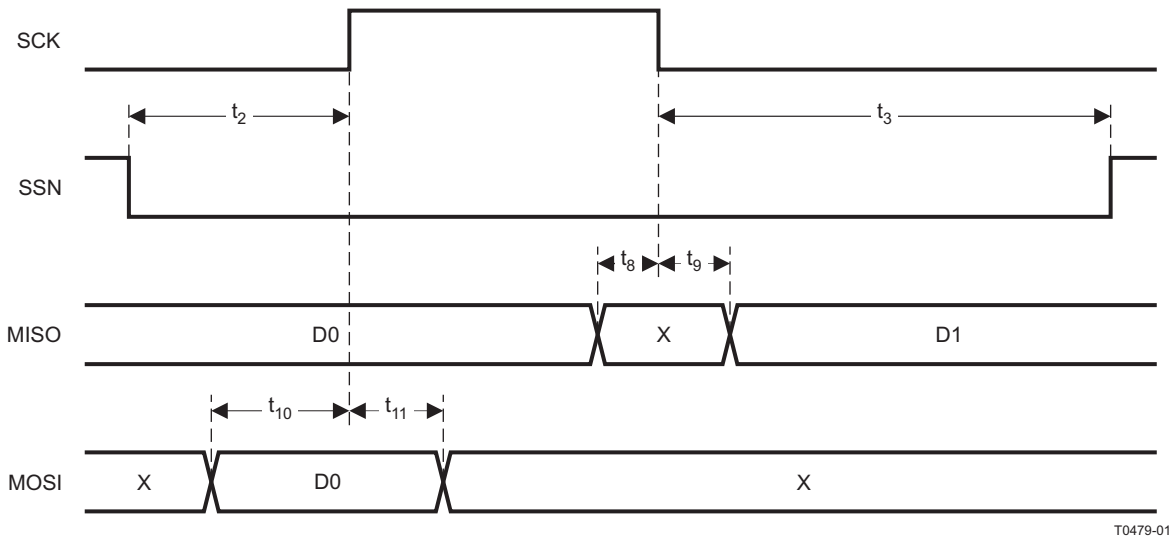

Figure 3. SPI Slave AC Characteristics

DEBUG INTERFACE AC CHARACTERISTICS

T_A = –40°C to 85°C, VDD = 2 V to 3.6 V

PARAMETER		TEST CONDITIONS	MIN	TYP	MAX	UNIT
f_{clk_dbg}	Debug clock frequency (see Figure 4)				12	MHz
t_1	Allowed high pulse on clock (see Figure 4)		35			ns
t_2	Allowed low pulse on clock (see Figure 4)		35			ns
t_3	EXT_RESET_N low to first falling edge on debug clock (see Figure 5)		167			ns
t_4	Falling edge on clock to EXT_RESET_N high (see Figure 5)		83			ns
t_5	EXT_RESET_N high to first debug command (see Figure 5)		83			ns
t_6	Debug data setup (see Figure 6)		2			ns
t_7	Debug data hold (see Figure 6)		4			ns
t_8	Clock-to-data delay (see Figure 6)	Load = 10 pF			30	ns

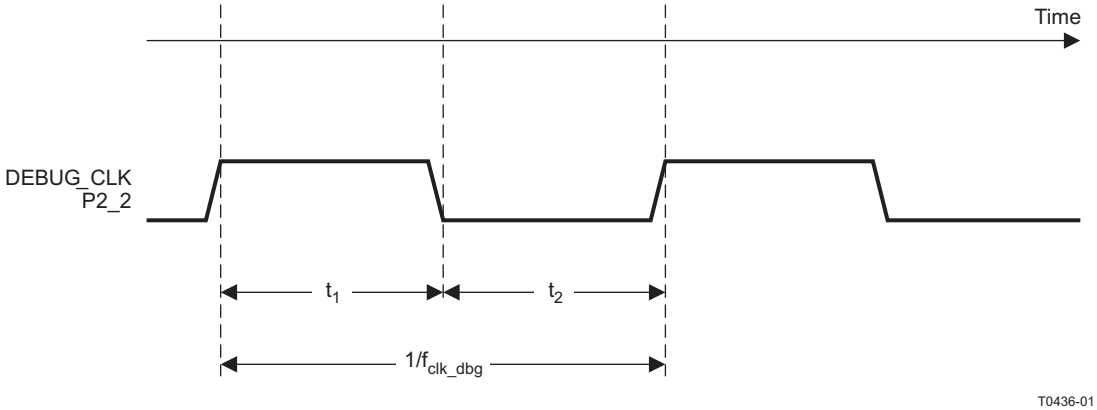

Figure 4. Debug Clock – Basic Timing

Copyright © 2012–2013, Texas Instruments Incorporated

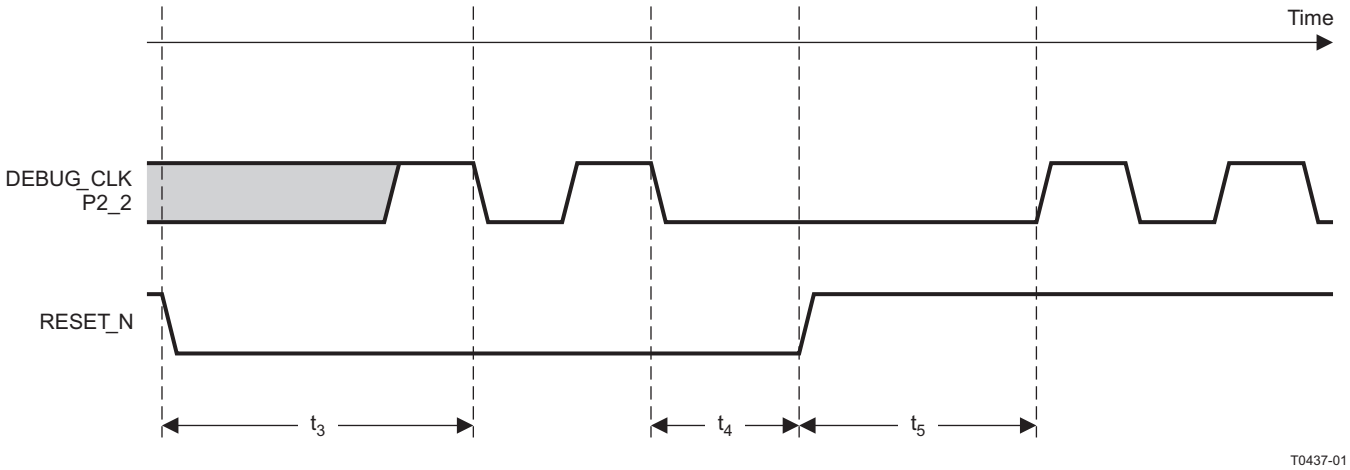

Figure 5. Debug Enable Timing

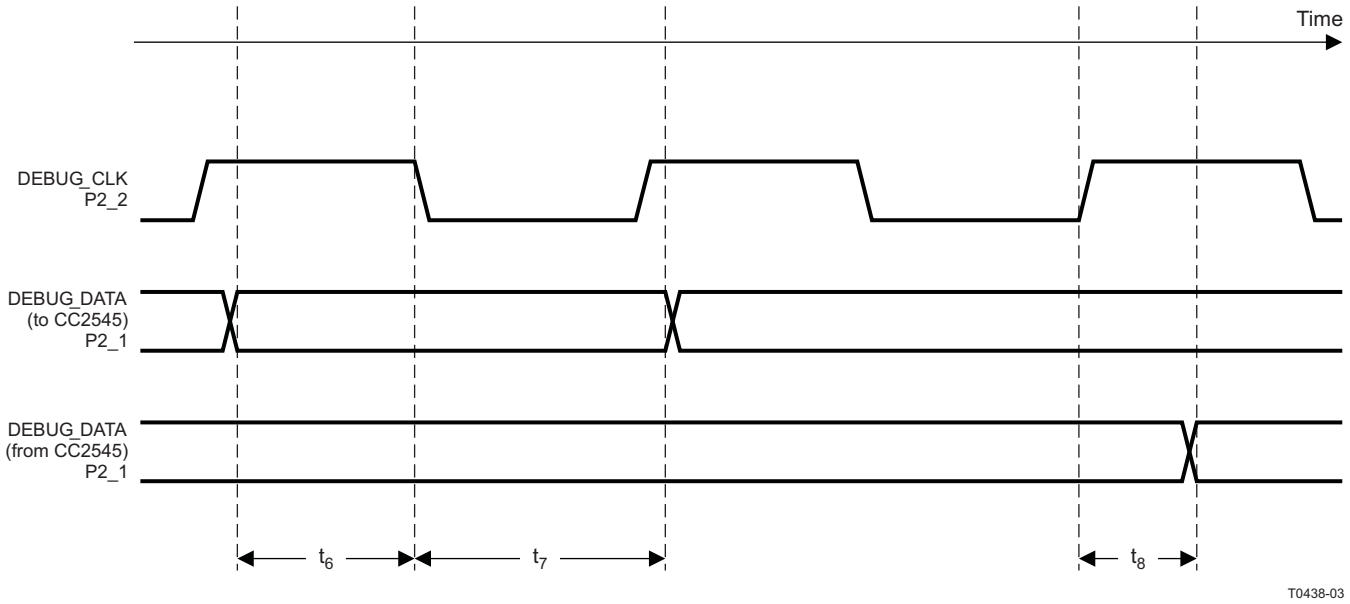

Figure 6. Data Setup and Hold Timing

TIMER INPUTS AC CHARACTERISTICS

T_A = –40°C to 85°C, VDD = 2 V to 3.6 V

PARAMETER	TEST CONDITIONS	MIN	TYP	MAX	UNIT
Input capture pulse duration	Synchronizers determine the shortest input pulse that can be recognized. The synchronizers operate at the current system clock rate (16 MHz or 32 MHz).	1.5			t_{SYSCLK}

DEVICE INFORMATION

RGZ PACKAGE
(TOP VIEW)

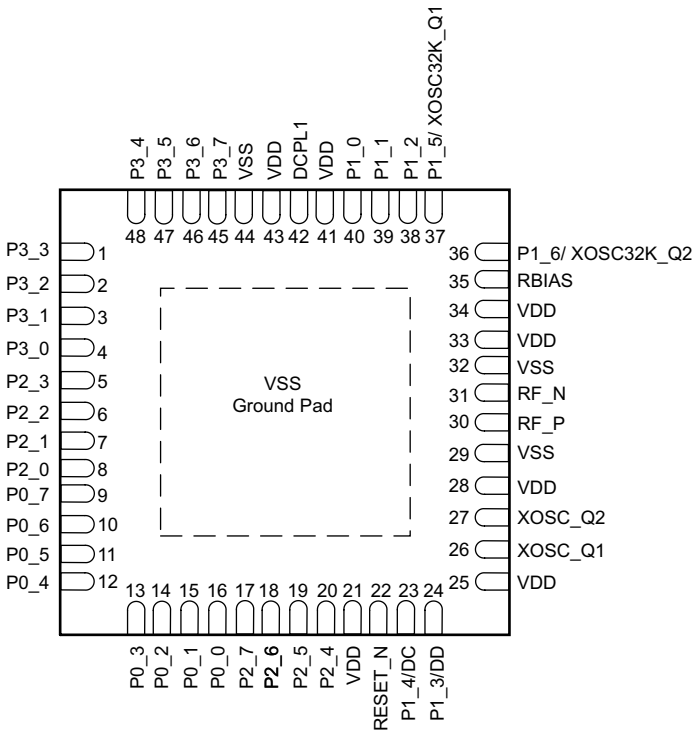

NOTE: The exposed ground pad must be connected to a solid ground plane; this is the main ground connection for the chip.

Table 1. Pin Description Table

NAME	PIN	PIN TYPE	DESCRIPTION
P3_3	1	Digital I/O	Port 3.3
P3_2	2	Digital I/O	Port 3.2
P3_1	3	Digital I/O	Port 3.1
P3_0	4	Digital I/O	Port 3.0
P2_3	5	Digital I/O	Port 2.3
P2_2	6	Digital I/O	Port 2.2
P2_1	7	Digital I/O	Port 2.1
P2_0	8	Digital I/O	Port 2.0
P0_7	9	Digital I/O	Port 0.7
P0_6	10	Digital I/O	Port 0.6
P0_5	11	Digital I/O	Port 0.5
P0_4	12	Digital I/O	Port 0.4
P0_3	13	Digital I/O	Port 0.3
P0_2	14	Digital I/O	Port 0.2
P0_1	15	Digital I/O	Port 0.1
P0_0	16	Digital I/O	Port 0.0
P2_7	17	Digital I/O	Port 2.7
P2_6	18	Digital I/O	Port 2.6
P2_5	19	Digital I/O	Port 2.5
P2_4	20	Digital I/O	Port 2.4

Copyright © 2012–2013, Texas Instruments Incorporated

Table 1. Pin Description Table (continued)

NAME	PIN	PIN TYPE	DESCRIPTION
VDD	21	Power (analog)	2-V-3.6V analog power-supply connection
RESET_N	22	Digital input	Reset, active-low
P1_4/DC	23	Digital I/O / Debug	Port 1.4/Debug
P1_3/DD	24	Digital I/O / Debug	Port 1.3/Debug
VDD	25	Power (analog)	2-V-3.6V analog power-supply connection
XOSC_Q1	26	Analog I/O	32-MHz crystal oscillator pin 1or external-clock input
XOSC_Q2	27	Analog I/O	32-MHz crystal oscillator pin 2
VDD	28	Power (analog)	2-V-3.6V analog power-supply connection
VSS	29	Unused pin	Connect to ground
RF_P	30	RF I/O	Positive RF input signal to LNA during RX Positive RF output signal from PA during TX
RF_N	31	RF I/O	Negative RF input signal to LNA during RX Negative RF output signal from PA during TX
VSS	32	Unused pin	Connect to ground
VDD	33	Power (analog)	2-V-3.6V analog power-supply connection
VDD	34	Power (analog)	2-V-3.6V analog power-supply connection
RBIAS	35	Analog I/O	External precision bias resistor for reference current
P1_6/ XOSC32K_ Q2	36	Digital I/O / Analog I/O	Port 1.6/32.768-kHz XOSC
P1_5/ XOSC32k_ Q1	37	Digital I/O / Analog I/O	Port 1.5/32.768-kHz XOSC
P1_2	38	Digital I/O	Port 1.2, 20mA
P1_1	39	Digital I/O	Port 1.1, 20mA
P1_0	40	Digital I/O	Port 1.0, 20mA
VDD	41	Power (analog)	2-V-3.6V analog power-supply connection
DCPL1	42	Power (digital)	1.8-V digital power-supply decoupling. Do not use for supplying external circuits.
VDD	43	Power (analog)	2-V-3.6V analog power-supply connection
VSS	44	Unused pin	Connect to ground
P3_7	45	Digital I/O	Port 3.7
P3_6	46	Digital I/O	Port 3.6
P3_5	47	Digital I/O	Port 3.5
P3_4	48	Digital I/O	Port 3.4
VSS	Ground Pad	Ground	Must be connected to solid ground as this is the main ground connection for the chip. See Pinout Diagram.

Copyright © 2012–2013, Texas Instruments Incorporated

BLOCK DIAGRAM

A block diagram of the CC2545 is shown in Figure 7. The modules can be roughly divided into one of three categories: CPU-related modules; modules related to power, test, and clock distribution; and radio-related modules. In the following subsections, a short description of each module is given. See CC2543/44/45 User's Guide (SWRU283) for more details.

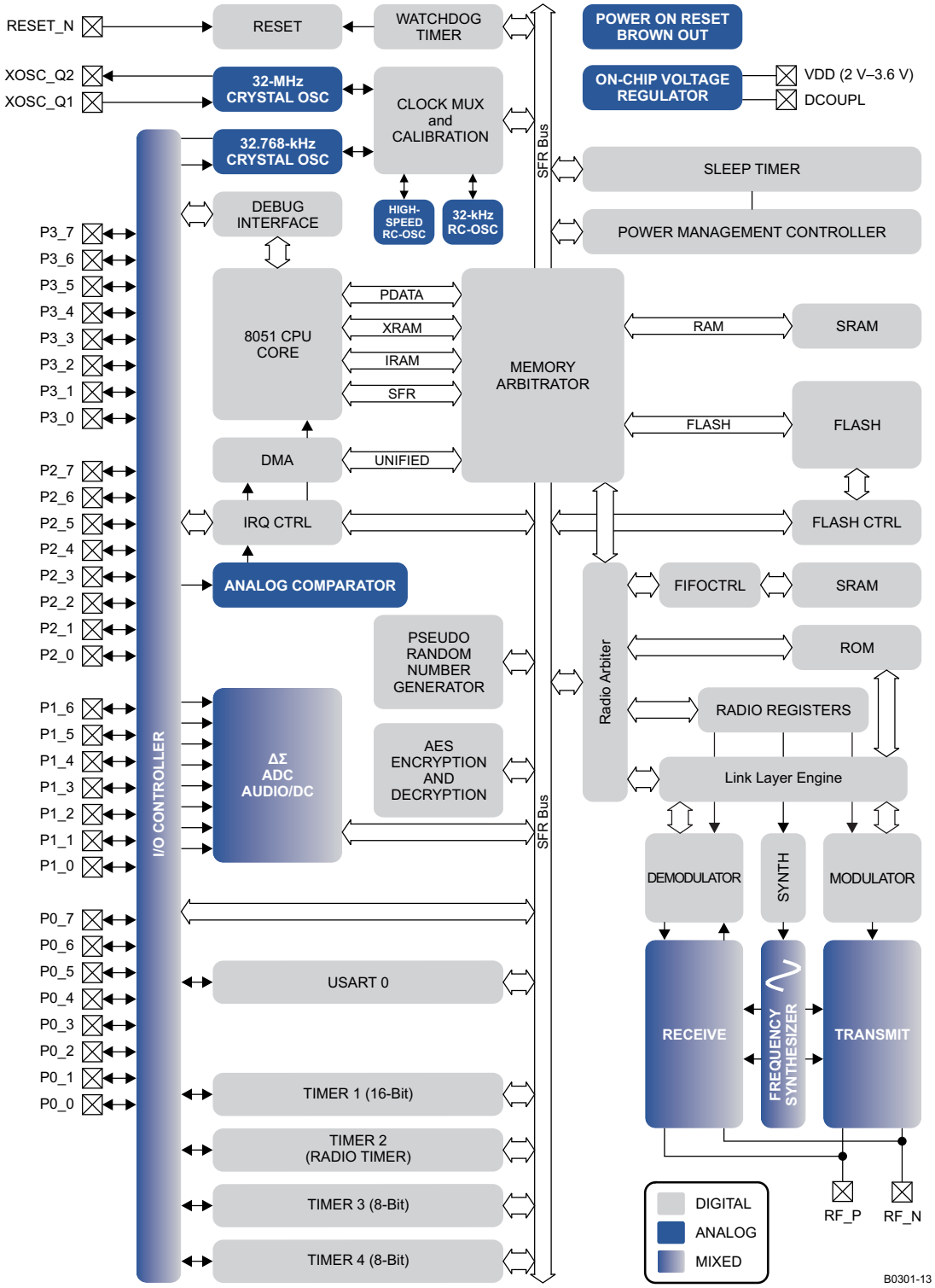

Figure 7. CC2545 Block Diagram

Copyright © 2012–2013, Texas Instruments Incorporated

BLOCK DESCRIPTIONS

CPU and Memory

The **8051 CPU core** is a single-cycle 8051-compatible core. It has three different memory access busses (SFR, DATA, and CODE/XDATA), a debug interface, and an 15-input extended interrupt unit.

The **memory arbiter** is at the heart of the system, as it connects the CPU and DMA controller with the physical memories and all peripherals through the SFR bus. The memory arbiter has four memory-access points, access of which can map to one of three physical memories: an SRAM, flash memory, and XREG/SFR registers. It is responsible for performing arbitration and sequencing between simultaneous memory accesses to the same physical memory.

The **SFR bus** is drawn conceptually in Figure 7 as a common bus that connects all hardware peripherals to the memory arbiter. The SFR bus in the block diagram also provides access to the radio registers in the radio register bank, even though these are indeed mapped into XDATA memory space.

The **1-KB SRAM** maps to the DATA memory space and to parts of the XDATA memory spaces.

The **18-KB/32-KB flash block** provides in-circuit programmable non-volatile program memory for the device, and maps into the CODE and XDATA memory spaces.

Peripherals

Writing to the flash block is performed through a **flash controller** that allows page-wise erasure and 4-bytewise programming. See User Guide for details on the flash controller.

A versatile two-channel **DMA controller** is available in the system, accesses memory using the XDATA memory space, and thus has access to all physical memories. Each channel (trigger, priority, transfer mode, addressing mode, source and destination pointers, and transfer count) is configured with DMA descriptors that can be located anywhere in memory. Many of the hardware peripherals (AES core, flash controller, USART, timers, etc.) can be used with the DMA controller for efficient operation by performing data transfers between a single SFR or XREG address and flash/SRAM.

The **interrupt controller** services a total of 17 interrupt sources, divided into six interrupt groups, each of which is associated with one of four interrupt priorities. Any interrupt service request is serviced also when the device is in idle mode by going back to active mode. Some interrupts can also wake up the device from sleep mode (when in sleep mode, the device is in low-power mode PM1, PM2 or PM3).

The **debug interface** implements a proprietary two-wire serial interface that is used for in-circuit debugging. Through this debug interface, it is possible to perform an erasure of the entire flash memory, control which oscillators are enabled, stop and start execution of the user program, execute supplied instructions on the 8051 core, set code breakpoints, and single-step through instructions in the code. Using these techniques, it is possible to perform in-circuit debugging and external flash programming elegantly.

The **I/O controller** is responsible for all general-purpose I/O pins. The CPU can configure whether peripheral modules control certain pins or whether they are under software control, and if so, whether each pin is configured as an input or output and if a pullup or pulldown resistor in the pad is connected. Each peripheral that connects to the I/O pins can choose between several different I/O pin locations to ensure flexibility in various applications.

The **sleep timer** is an ultralow-power timer that can use either an external 32.768-kHz XOSC or an internal 32.753-kHz RC oscillator. The sleep timer runs continuously in all operating modes. Typical applications of this timer are as a real-time counter or as a wake-up timer to get out of power modes 1 or 2.

A built-in **watchdog timer** allows the CC2545 to reset itself if the firmware hangs. When enabled by software, the watchdog timer must be cleared periodically; otherwise, it resets the device when it times out.

Timer 1 is a 16-bit timer with timer/counter/PWM functionality. It has a programmable prescaler, a 16-bit period value, and five individually programmable counter/capture channels, each with a 16-bit compare value. Each of the counter/capture channels can be used as a PWM output or to capture the timing of edges on input signals. It can also be configured in IR generation mode, where it counts timer 3 periods and the output is ANDed with the output of timer 3 to generate modulated consumer IR signals with minimal CPU interaction.

Copyright © 2012–2013, Texas Instruments Incorporated

Timer 2 is a 40-bit timer used by the Radio. It has a 16-bit counter with a configurable timer period and a 24-bit overflow counter that can be used to keep track of the number of periods that have transpired. A 40-bit capture register is also used to record the exact time at which a start-of-frame delimiter is received/transmitted or the exact time at which a packet ends. There are two 16-bit timer-compare registers and two 24-bit overflow-compare registers that can be used to give exact timing for start of RX or TX to the radio or general interrupts.

Timer 3 and timer 4 are 8-bit timers with timer/counter/PWM functionality. They have a programmable prescaler, an 8-bit period value, and one programmable counter channel with an 8-bit compare value. Each of the counter channels can be used as PWM output.

USART 0 is configurable as either an SPI master/slave or a UART. It provides double buffering on both RX and TX and hardware flow control and is thus well suited to high-throughput full-duplex applications. The USART has its own high-precision baud-rate generator, thus leaving the ordinary timers free for other uses. When configured as SPI slaves, the USART samples the input signal using SCK directly instead of using some oversampling scheme, and are thus well-suited for high data rates.

I^2C module provides a digital peripheral connection with two pins and supports both master and slave operation.

The **AES encryption/decryption core** allows the user to encrypt and decrypt data using the AES algorithm with 128-bit keys. The AES core also supports ECB, CBC, CFB, OFB, CTR, and CBC-MAC, as well as hardware support for CCM.

The ultralow power **analog comparator** enables applications to wake up from PM2 or PM3 based on an analog signal. Both inputs are brought out to pins; the reference voltage must be provided externally. The comparator output is mapped into the digital I/O port and can be treated by the MCU as a regular digital input.

Copyright © 2012–2013, Texas Instruments Incorporated

TYPICAL CHARACTERISTICS

All curves are for measurements performed at 2Mbps, GFSK, 320-kHz deviation.

RX CURRENT vs TEMPERATURE

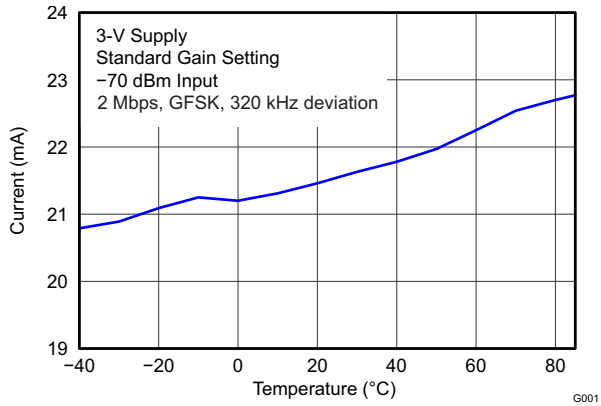

Figure 8.

TX CURRENT vs TEMPERATURE

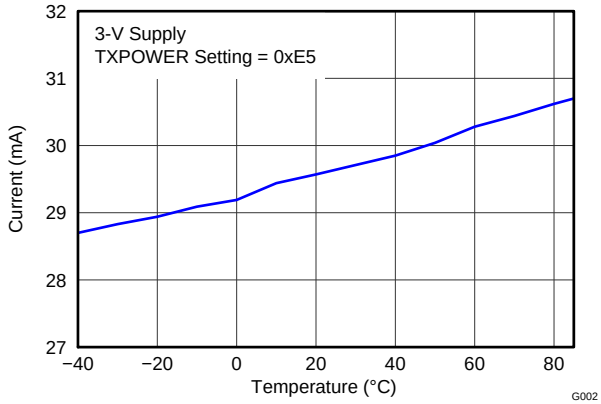

Figure 9.

RX SENSITIVITY vs TEMPERATURE

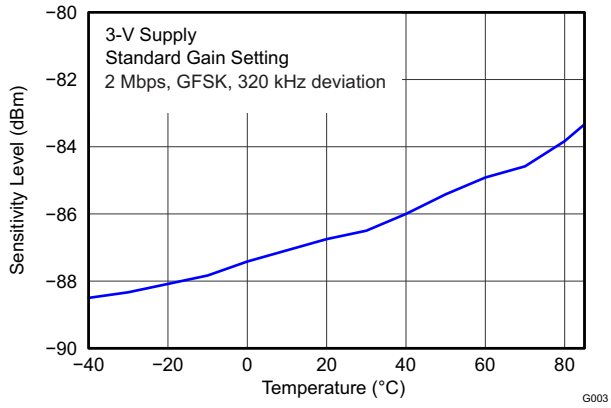

Figure 10.

TX POWER vs TEMPERATURE

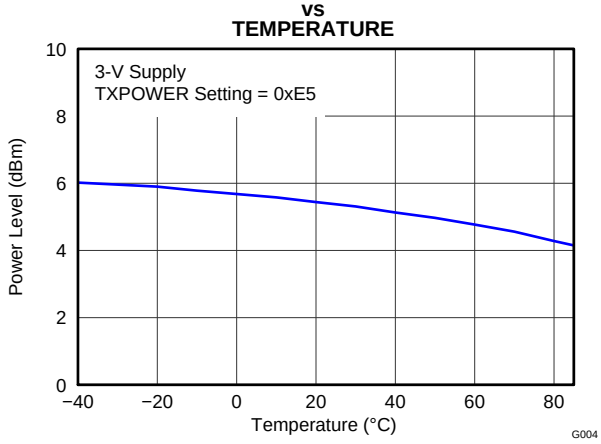

Figure 11.

RX CURRENT vs SUPPLY VOLTAGE

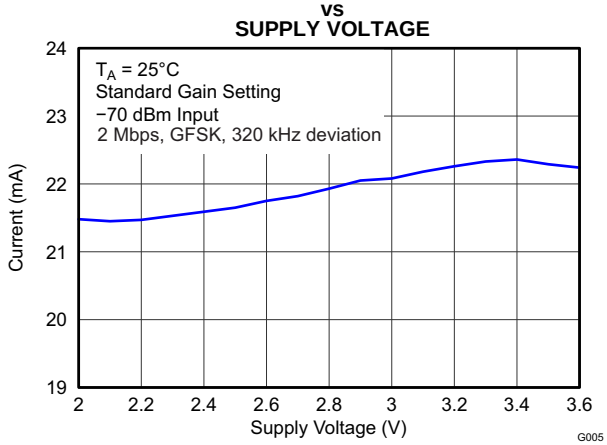

Figure 12.

TX CURRENT vs SUPPLY VOLTAGE

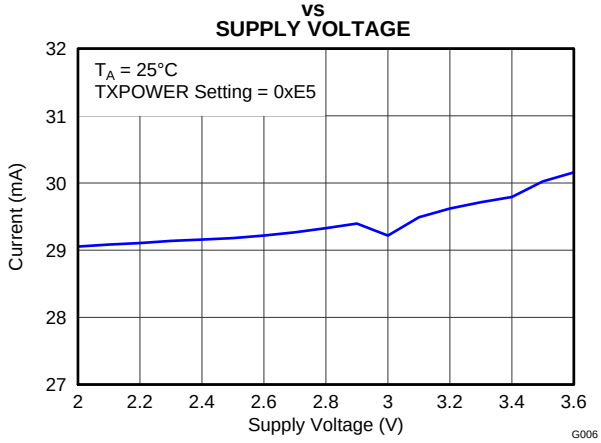

Figure 13.

TYPICAL CHARACTERISTICS (continued)

All curves are for measurements performed at 2Mbps, GFSK, 320-kHz deviation.

RX SENSITIVITY vs SUPPLY VOLTAGE

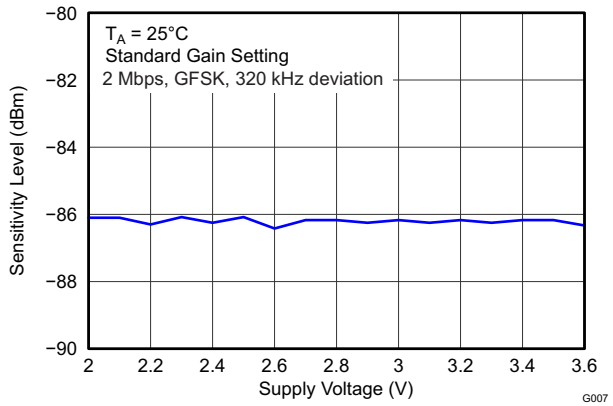

Figure 14.

TX POWER vs SUPPLY VOLTAGE

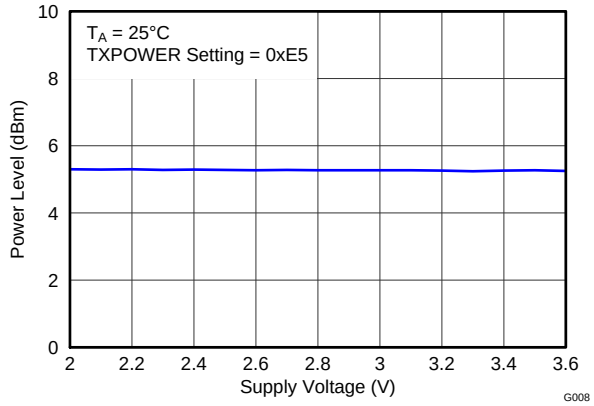

Figure 15.

RX SENSITIVITY vs FREQUENCY

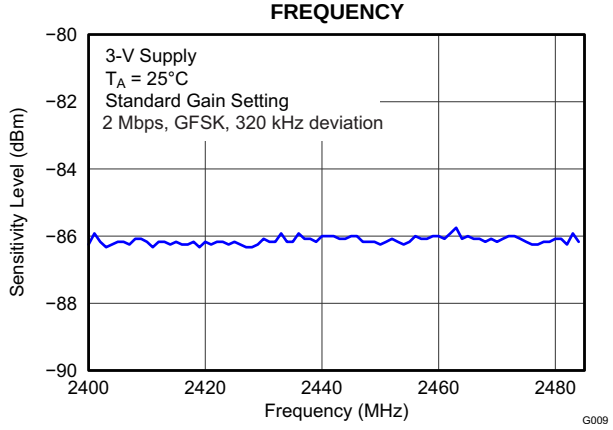

Figure 16.

TX POWER vs FREQUENCY

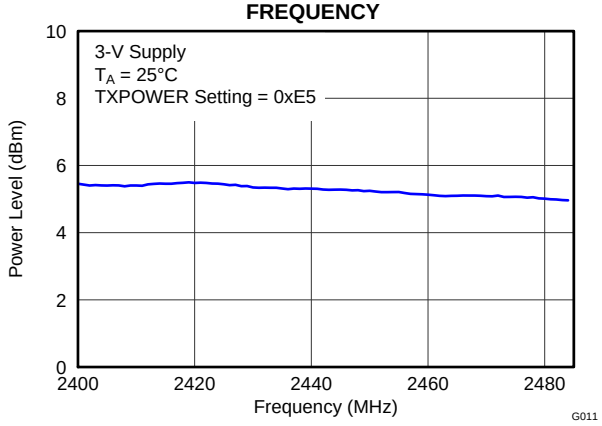

Figure 17.

RX INTERFERER REJECTION (SELECTIVITY) vs INTERFERER FREQUENCY

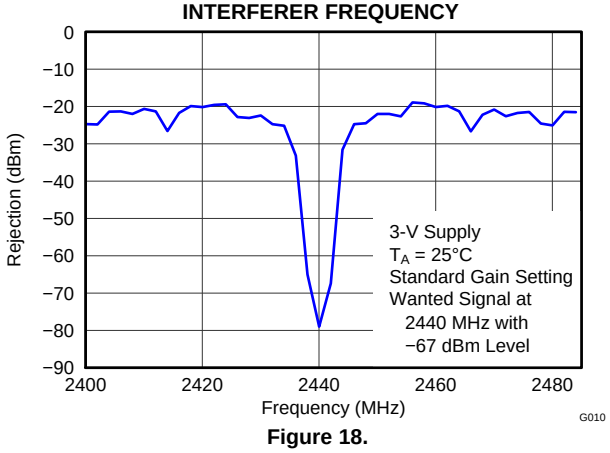

Figure 18.

Copyright © 2012–2013, Texas Instruments Incorporated

TYPICAL CHARACTERISTICS (continued)

Table 2. Recommended Output Power Settings[1]

TXPOWER Register Setting	Typical Output Power (dBm)
0xE5	5
0xD5	4
0xC5	3
0xB5	2
0xA5	0
0x95	–2
0x85	–3
0x75	–4
0x65	–6
0x55	–8
0x45	–11
0x35	–13
0x25	–15
0x15	–17
0x05	–20

(1) Measured on Texas Instruments CC2545 EM reference design with TA = 25°C, VDD = 3 V, and fc = 2440 MHz. See SWRU283 for recommended register settings.

APPLICATION INFORMATION

Few external components are required for the operation of the CC2545. A typical application circuit is shown in Figure 19. For suggestions of component values other than those listed in Table 3, see reference design CC2545EM. The performance stated in this data sheet is only valid for the CC2545EM reference design. To obtain similar performance, the reference design should be copied as closely as possible.

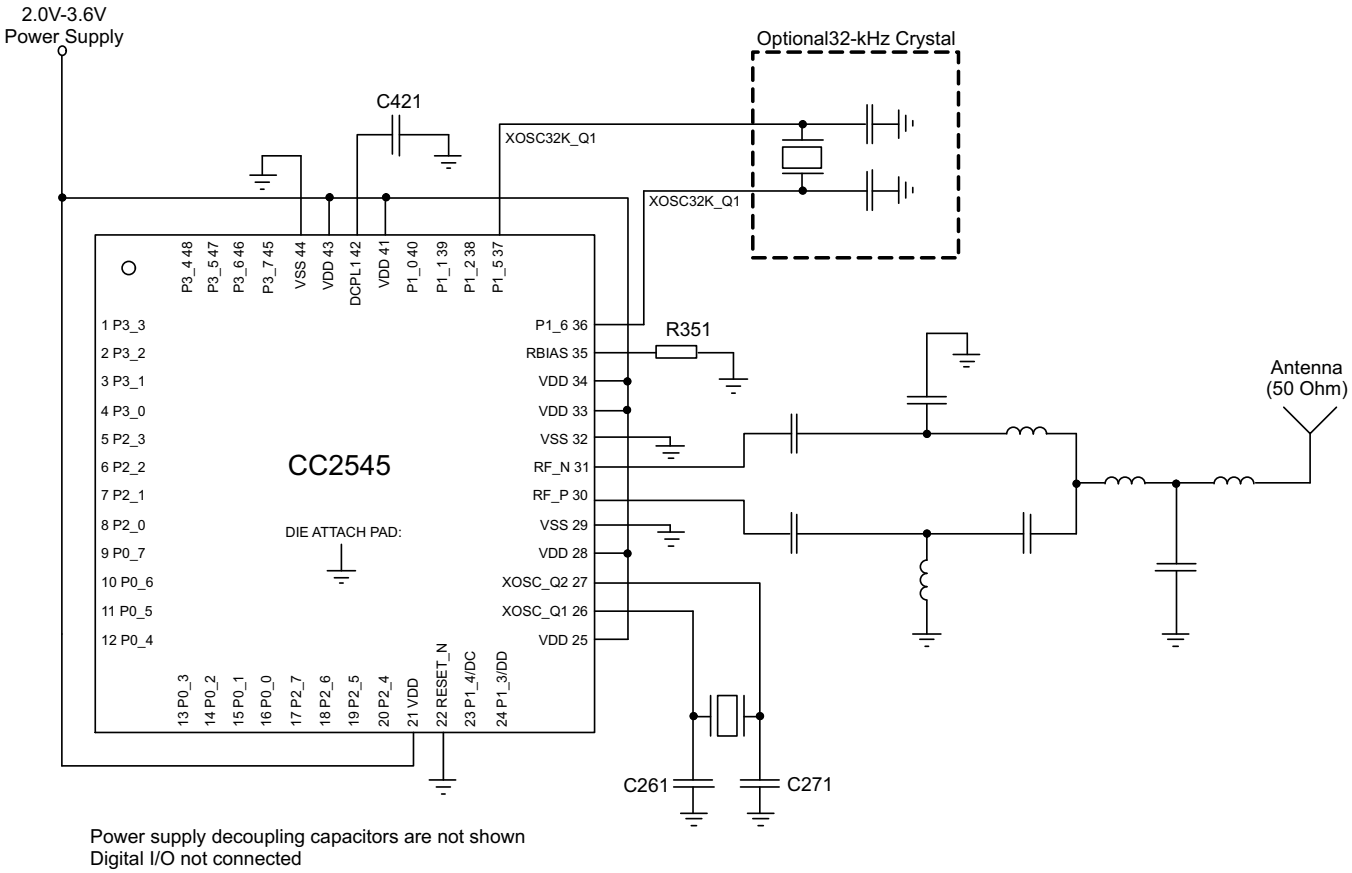

Figure 19. CC2545 Application Circuit

Table 3. Overview of External Components (Excluding Balun, Crystal and Supply Decoupling Capacitors)

Component	Description	Value
C421	Decoupling capacitor for the internal 1.8V digital voltage regulator	1 µF
R351	Precision resistor ±1%, used for internal biasing	56 kΩ

Input/Output Matching

When using an unbalanced antenna such as a monopole, a balun should be used to optimize performance. The balun can be implemented using low-cost discrete inductors and capacitors. See reference design, CC2545EM, for recommended balun.

Copyright © 2012–2013, Texas Instruments Incorporated

Crystal

An external 32-MHz crystal with two loading capacitors is used for the 32-MHz crystal oscillator. The load capacitance seen by the 32-MHz crystal is given by:

$$C_L = \frac{1}{\frac{1}{C_{261}} + \frac{1}{C_{271}}} + C_{parasitic} \quad (1)$$

A series resistor may be used to comply with ESR requirement.

On-Chip 1.8-V Voltage Regulator Decoupling

The 1.8-V on-chip voltage regulator supplies the 1.8-V digital logic. This regulator requires a decoupling capacitor (C421) for stable operation.

Power-Supply Decoupling and Filtering

Proper power-supply decoupling must be used for optimum performance. The placement and size of the decoupling capacitors and the power supply filtering are very important to achieve the best performance in an application. TI provides a compact reference design that should be followed very closely.

REVISION HISTORY

Changes from Original (June 2012) to Revision A	Page
• Deleted Product Preview banner	1
• Changed the Temperature coefficient Unit value From: mV/°C To: / 0.1°C	8
• Changed Figure 19	22

Changes from Revision A (August 2012) to Revision B	Page
• Changed From: RTC Pin Package To: RGZ Pin Package	14

PACKAGING INFORMATION

Orderable Device	Status (1)	Package Type	Package Drawing	Pins	Package Qty	Eco Plan (2)	Lead/Ball Finish (6)	MSL Peak Temp (3)	Op Temp (°C)	Device Marking (4/5)	Samples
CC2545RGZR	ACTIVE	VQFN	RGZ	48	2500	Green (RoHS & no Sb/Br)	CU NIPDAU	Level-3-260C-168 HR	-40 to 85	CC2545	Samples
CC2545RGZT	ACTIVE	VQFN	RGZ	48	250	Green (RoHS & no Sb/Br)	CU NIPDAU	Level-3-260C-168 HR	-40 to 85	CC2545	Samples

(1) The marketing status values are defined as follows:
ACTIVE: Product device recommended for new designs.
LIFEBUY: TI has announced that the device will be discontinued, and a lifetime-buy period is in effect.
NRND: Not recommended for new designs. Device is in production to support existing customers, but TI does not recommend using this part in a new design.
PREVIEW: Device has been announced but is not in production. Samples may or may not be available.
OBSOLETE: TI has discontinued the production of the device.

(2) Eco Plan - The planned eco-friendly classification: Pb-Free (RoHS), Pb-Free (RoHS Exempt), or Green (RoHS & no Sb/Br) - please check http://www.ti.com/productcontent for the latest availability information and additional product content details.
TBD: The Pb-Free/Green conversion plan has not been defined.
Pb-Free (RoHS): TI's terms "Lead-Free" or "Pb-Free" mean semiconductor products that are compatible with the current RoHS requirements for all 6 substances, including the requirement that lead not exceed 0.1% by weight in homogeneous materials. Where designed to be soldered at high temperatures, TI Pb-Free products are suitable for use in specified lead-free processes.
Pb-Free (RoHS Exempt): This component has a RoHS exemption for either 1) lead-based flip-chip solder bumps used between the die and package, or 2) lead-based die adhesive used between the die and leadframe. The component is otherwise considered Pb-Free (RoHS compatible) as defined above.
Green (RoHS & no Sb/Br): TI defines "Green" to mean Pb-Free (RoHS compatible), and free of Bromine (Br) and Antimony (Sb) based flame retardants (Br or Sb do not exceed 0.1% by weight in homogeneous material)

(3) MSL, Peak Temp. - The Moisture Sensitivity Level rating according to the JEDEC industry standard classifications, and peak solder temperature.

(4) There may be additional marking, which relates to the logo, the lot trace code information, or the environmental category on the device.

(5) Multiple Device Markings will be inside parentheses. Only one Device Marking contained in parentheses and separated by a "~" will appear on a device. If a line is indented then it is a continuation of the previous line and the two combined represent the entire Device Marking for that device.

(6) Lead/Ball Finish - Orderable Devices may have multiple material finish options. Finish options are separated by a vertical ruled line. Lead/Ball Finish values may wrap to two lines if the finish value exceeds the maximum column width.

Important Information and Disclaimer: The information provided on this page represents TI's knowledge and belief as of the date that it is provided. TI bases its knowledge and belief on information provided by third parties, and makes no representation or warranty as to the accuracy of such information. Efforts are underway to better integrate information from third parties. TI has taken and continues to take reasonable steps to provide representative and accurate information but may not have conducted destructive testing or chemical analysis on incoming materials and chemicals. TI and TI suppliers consider certain information to be proprietary, and thus CAS numbers and other limited information may not be available for release.

In no event shall TI's liability arising out of such information exceed the total purchase price of the TI part(s) at issue in this document sold by TI to Customer on an annual basis.

GENERIC PACKAGE VIEW

RGZ 48

VQFN - 1 mm max height

7 x 7, 0.5 mm pitch

PLASTIC QUADFLAT PACK- NO LEAD

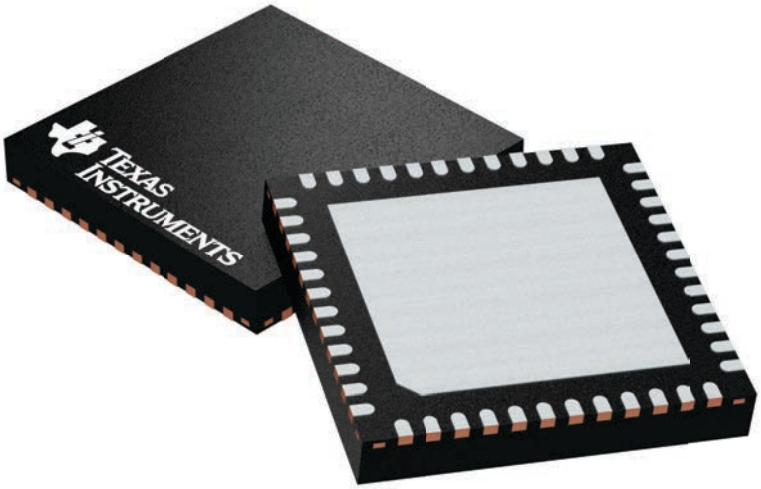

Images above are just a representation of the package family, actual package may vary.
Refer to the product data sheet for package details.

4224671/A

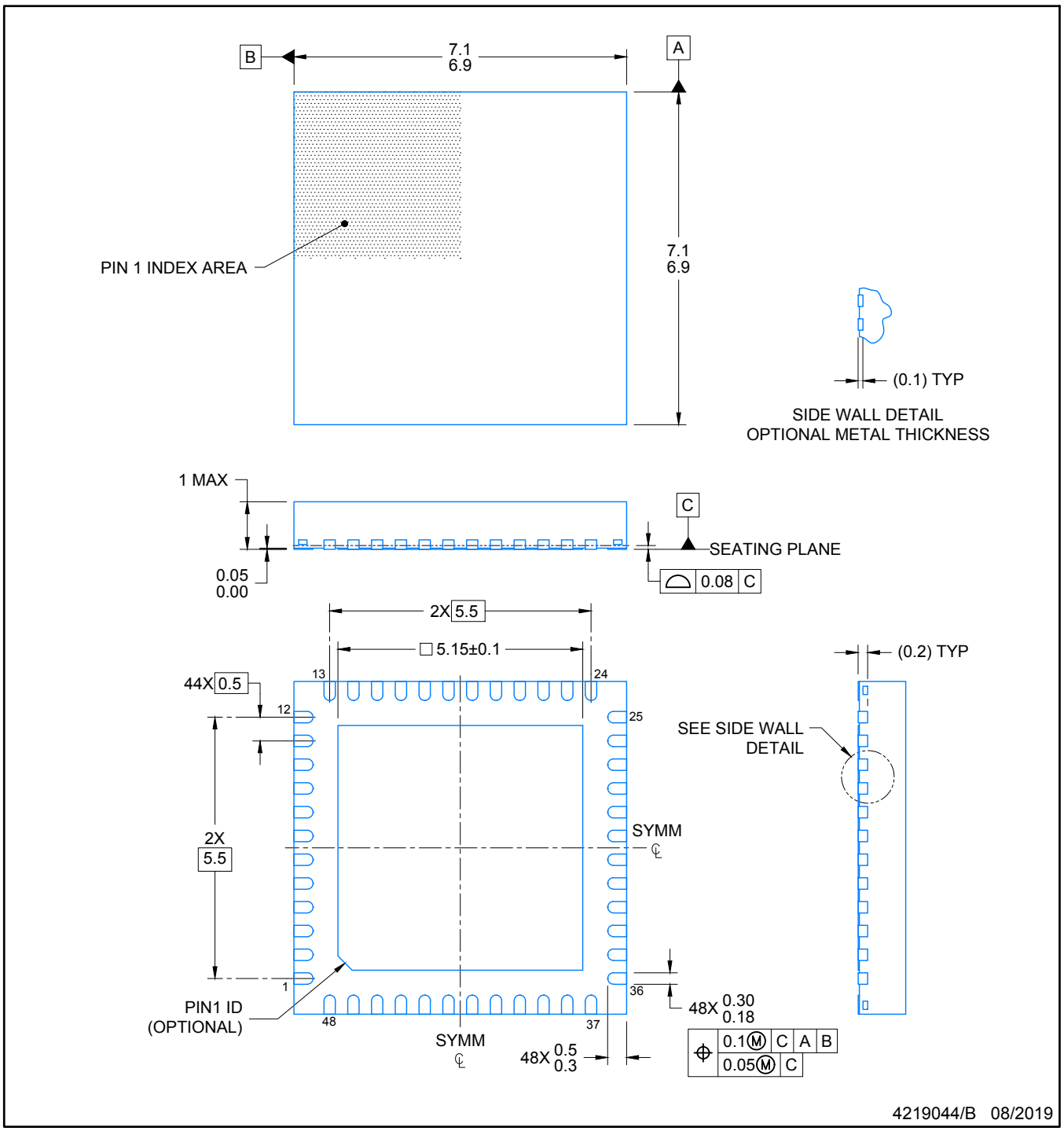

NOTES:

1. All linear dimensions are in millimeters. Any dimensions in parenthesis are for reference only. Dimensioning and tolerancing per ASME Y14.5M.
2. This drawing is subject to change without notice.
3. The package thermal pad must be soldered to the printed circuit board for optimal thermal and mechanical performance.

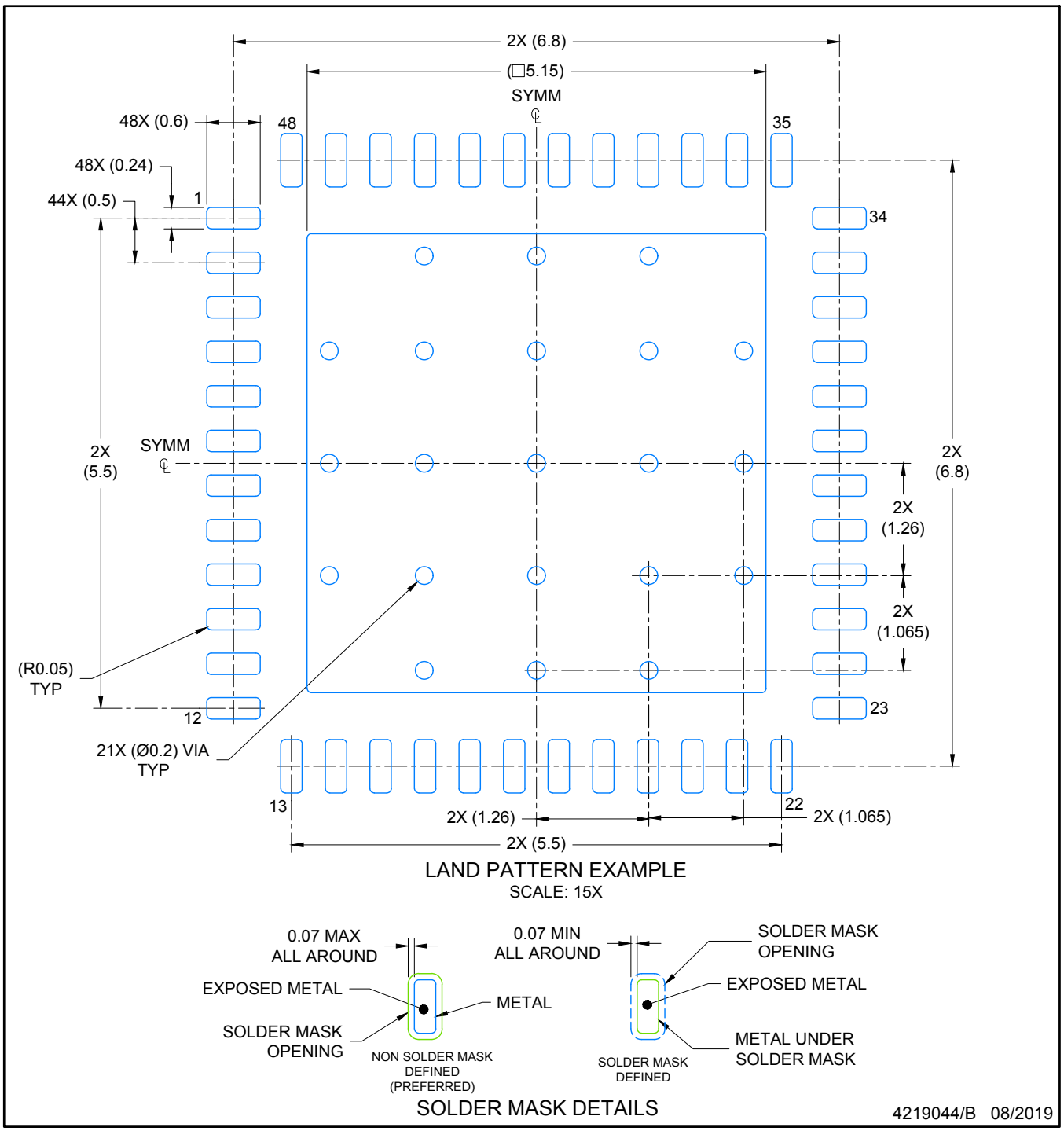

NOTES: (continued)

4. This package is designed to be soldered to a thermal pad on the board. For more information, see Texas Instruments literature number SLUA271 (www.ti.com/lit/slua271).
5. Vias are optional depending on application, refer to device data sheet. If any vias are implemented, refer to their locations shown on this view. It is recommended that vias under paste be filled, plugged or tented.

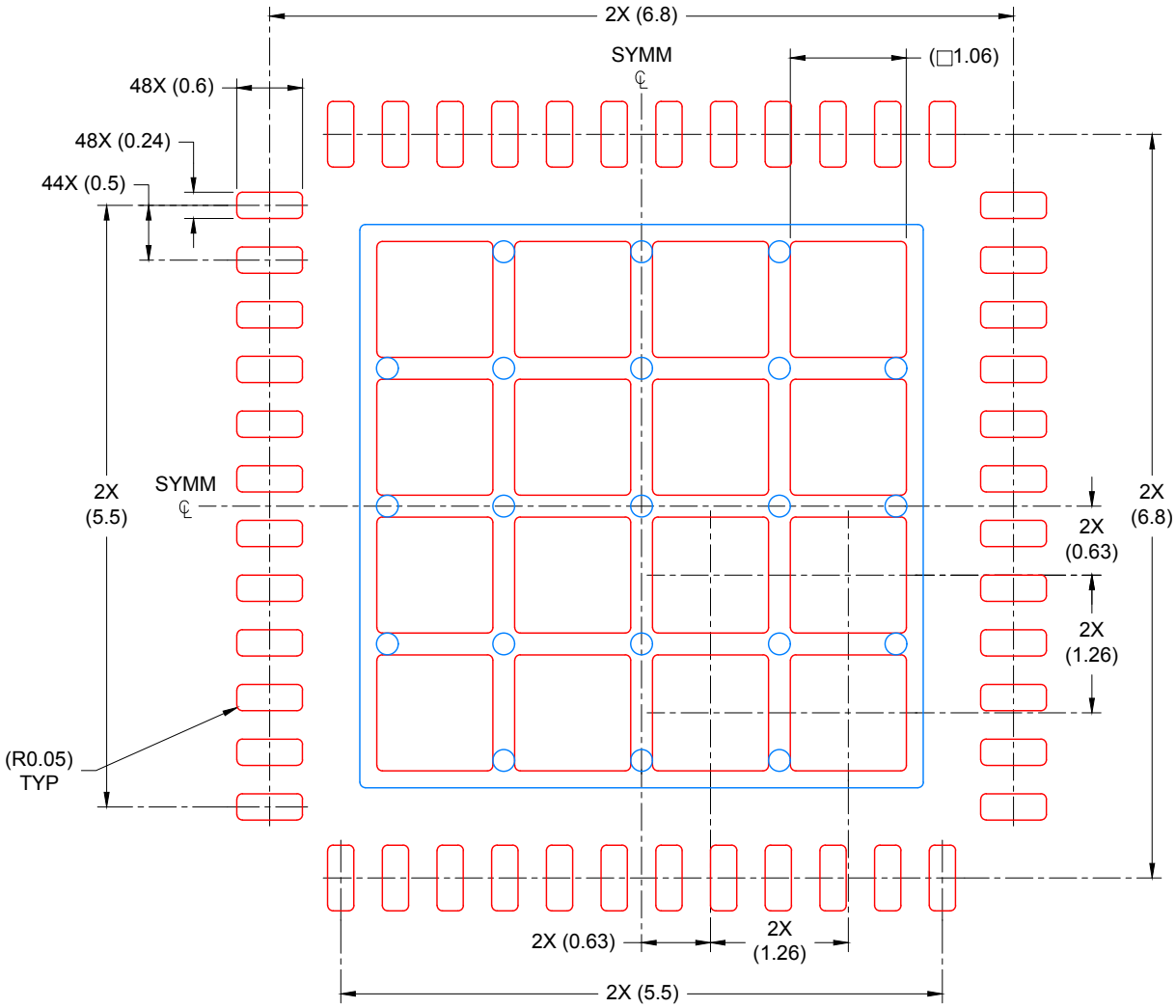

SOLDER PASTE EXAMPLE
BASED ON 0.125 mm THICK STENCIL

EXPOSED PAD
67% PRINTED COVERAGE BY AREA
SCALE: 15X

4219044/B 08/2019

NOTES: (continued)

6. Laser cutting apertures with trapezoidal walls and rounded corners may offer better paste release. IPC-7525 may have alternate design recommendations.

IMPORTANT NOTICE AND DISCLAIMER

TI PROVIDES TECHNICAL AND RELIABILITY DATA (INCLUDING DATASHEETS), DESIGN RESOURCES (INCLUDING REFERENCE DESIGNS), APPLICATION OR OTHER DESIGN ADVICE, WEB TOOLS, SAFETY INFORMATION, AND OTHER RESOURCES “AS IS” AND WITH ALL FAULTS, AND DISCLAIMS ALL WARRANTIES, EXPRESS AND IMPLIED, INCLUDING WITHOUT LIMITATION ANY IMPLIED WARRANTIES OF MERCHANTABILITY, FITNESS FOR A PARTICULAR PURPOSE OR NON-INFRINGEMENT OF THIRD PARTY INTELLECTUAL PROPERTY RIGHTS.

These resources are intended for skilled developers designing with TI products. You are solely responsible for (1) selecting the appropriate TI products for your application, (2) designing, validating and testing your application, and (3) ensuring your application meets applicable standards, and any other safety, security, or other requirements. These resources are subject to change without notice. TI grants you permission to use these resources only for development of an application that uses the TI products described in the resource. Other reproduction and display of these resources is prohibited. No license is granted to any other TI intellectual property right or to any third party intellectual property right. TI disclaims responsibility for, and you will fully indemnify TI and its representatives against, any claims, damages, costs, losses, and liabilities arising out of your use of these resources.

TI’s products are provided subject to TI’s Terms of Sale (www.ti.com/legal/termsofsale.html) or other applicable terms available either on ti.com or provided in conjunction with such TI products. TI’s provision of these resources does not expand or otherwise alter TI’s applicable warranties or warranty disclaimers for TI products.

Mailing Address: Texas Instruments, Post Office Box 655303, Dallas, Texas 75265
Copyright © 2019, Texas Instruments Incorporated